Rev	Design Change Note	Author	Date
A	Internal validation	RB	2018-06-12
001	First issue - proposal	RB	2018-06-15
002	Approved by client	RB	2018-06-25

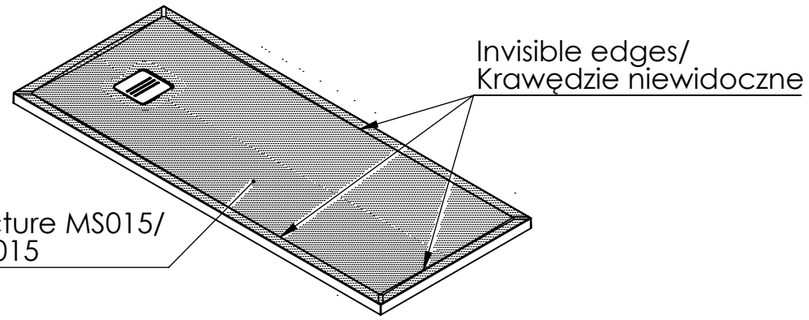

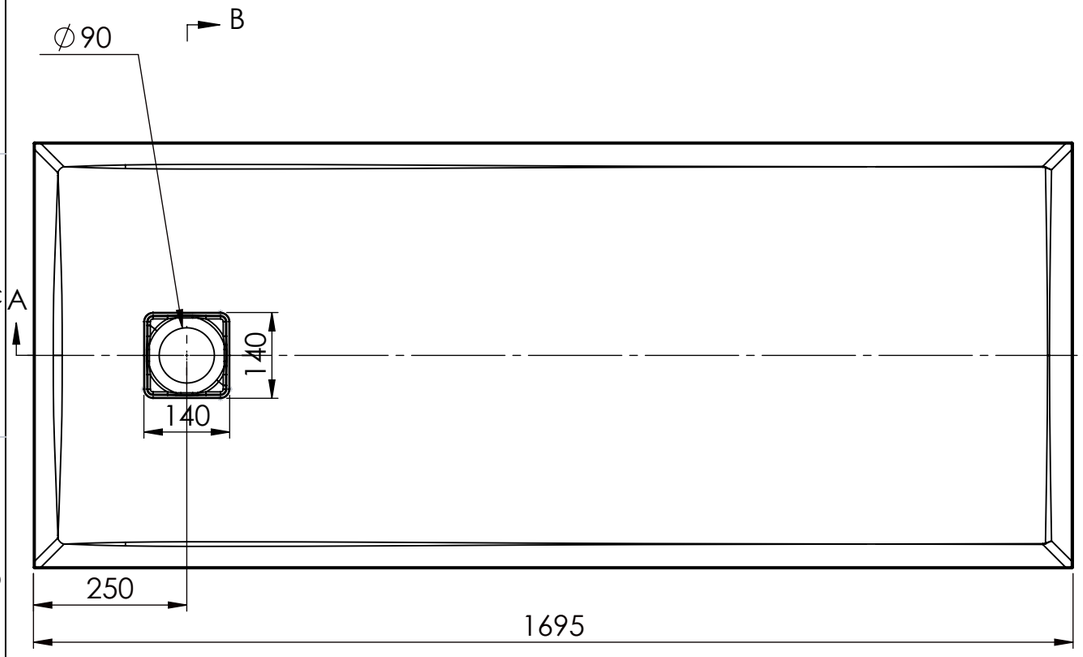

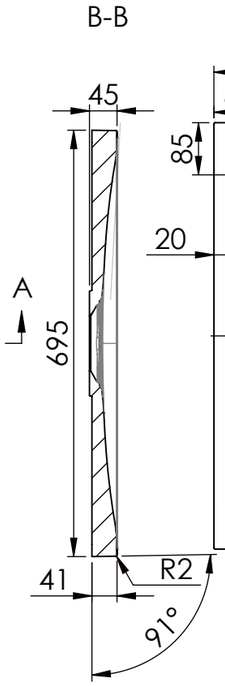

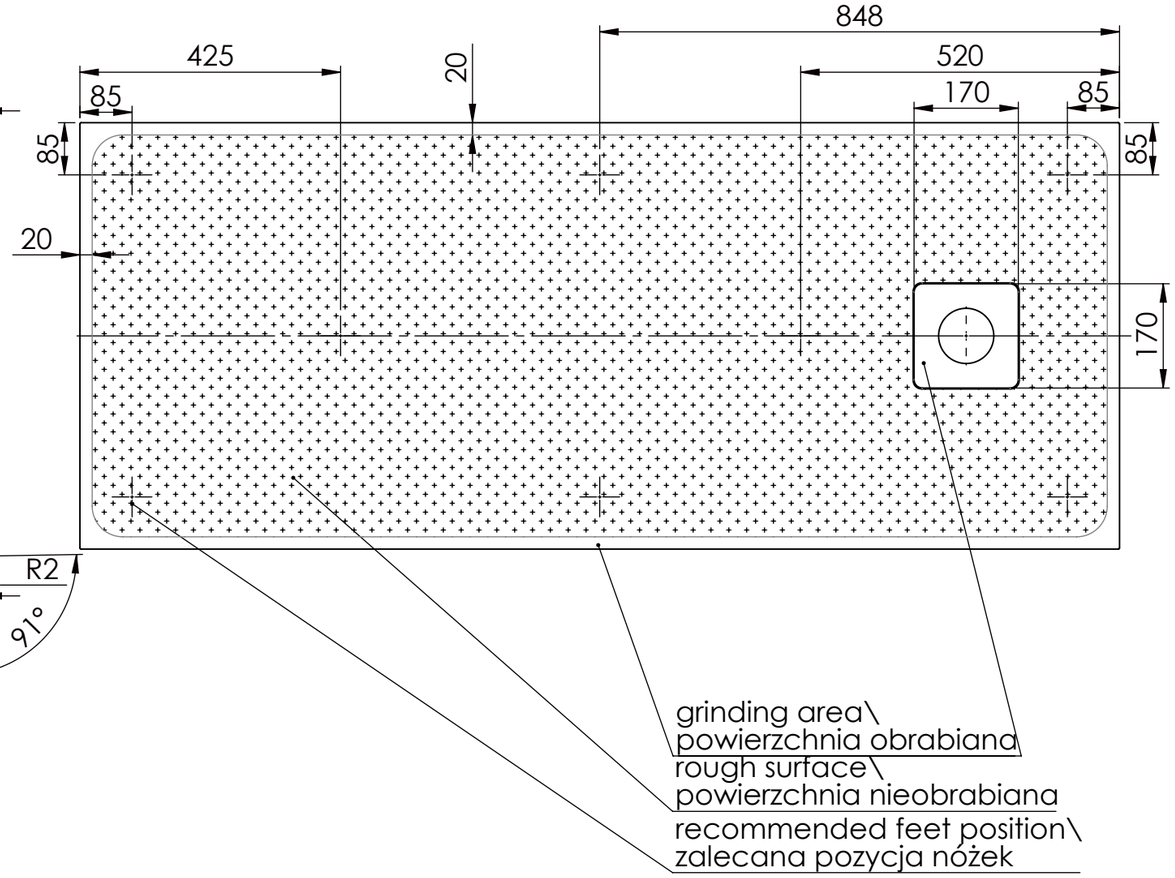

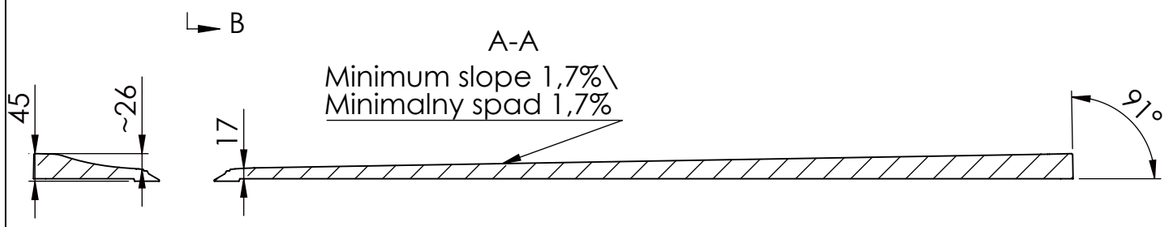

Notes/Uwagi:

1. Steel plate - see drawing 103300000055/Metalowa przykrywka - patrz rysunek 103300000055

Tolerance length/width		+5/0 mm
Tolerance height		+2/-2 mm
Tolerance plane bending	≤1200 mm	+2/-2 mm
	≥1200 mm	+3/-3 mm
Tolerance thickness		+2/-2 mm
Tolerance grinding		+2/0 mm
Tolerance feet location		+7/-7 mm
Tolerance holes location		+2/-2 mm
Tolerance holes diameter		+1/-1 mm

Drawn by	Created Date	Checked by
Rafal B	2018-06-12	Zbigniew P
Project status	Client	
Approved	LEROY MERLIN	

Art. Name: REMIX 1 1700x700
Art. No: 6073411730xx
Mould No: FZ341173
Customer ID: 3127

Material volume[mm³]	Overflow	Taphole	Main dimensions L x W / H [mm]	Drain
38701017	No	0	1700 x 700 / 45	Cover
Surface area[mm²]	Sheet Size	Scale		Current revision
2538859	A3	1:10		002

MARmite

This document must not be copied without our written permission, and the contents thereof must not be imparted to a third party nor be used for any unauthorized purpose. Contravention will be prosecuted.